Pocket Printer A6

Quick Start Guide

For Windows 98/98SE/ME/2000/XP/Pocket PC OS and Palm OS

Step 1: Unpacking Your Printer

REMOVE all the components from the box: Pocket Prinert A6 - Carrying case - RS-232 Serial cable - Four AA alkaline batteries - Quickstart Guide - One roll of A6 printer paper -Power supply - CD: Windows® Driver, Palm® and Pocket PC® PDA Drivers, Adobe® Acrobat Reader, and Electronic Owner's Manual

Step 2: Setting-up Your Printer

Inserting the Batteries:

1. Open the battery compartment cover located on the bottom of the Printer (See diagram to the right).
2. Insert the batteries accordingly.
   Note: The battery polarity is on the inside of the battery tray.
3. Close the battery compartment cover.

Turning on and off the Printer

On: Push and release the power button once to turn the printer on. The green power indicator will illuminate and the printer is ready to use.

Off: Push and release the power button once to turn the prnter off. The small green ready light will go out when the power is off.

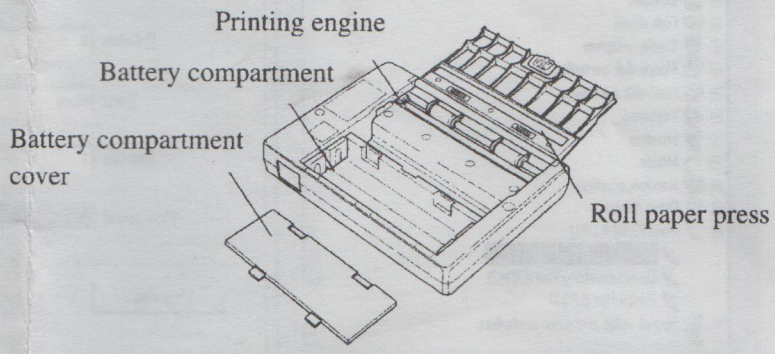

Inserting the Paper

1. With the power off, open the A6 roll paper compartment.
2. Remove the roll paper from the protective plastic bag and remove the tape that secures the roll paper. Put the roll paper into the compartment. (Note the correct direction and position as the illustration indicates, darker side facing up and white side down.)
3. Pull about 1/2" (10mm) of the A6 roll paper out of the exit.
4. Close the cover of the A6 roll paper compartment.
5. Pull the paper upward and tear it off from the edge of the exit.

Note: For sheet paper loading instructions consult the Owner's Manual.

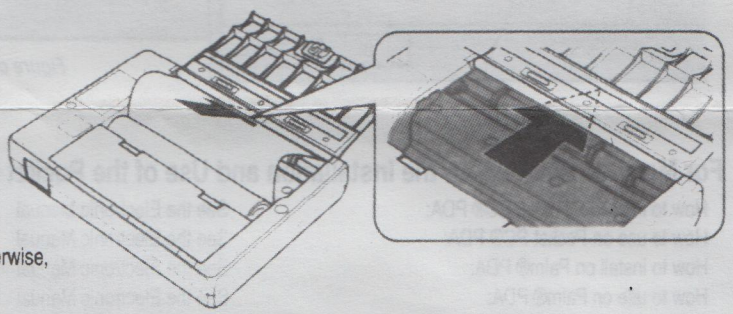

Step 3: Installing Software

Windows 98/98SE/ME

1. Insert the SiPix Pocket Printer A6 CD into the CD-ROM drive. The CD should auto run, otherwise, go to **Start --> Run;** enter **D:\SiPixMenu.exe** (where D:\ is your CD-ROM drive).
2. From the Installer Menu click on **"Install Windows 98/98SE/ME Printer Driver"**.
3. The Add Hardware Wizard screen will appear, click **"Next"** to continue setup.
4. Chose **"Local Printer"**, click **"Next"** to continue setup.
5. The following screen will show you a list of manufacturers and drivers, click the **"Have Disk"** button, and then **"Browse"**, type in **D:\Windows** (where D:\ is your CD-ROM drive) and click **OK**.
6. On the next screen highlight **"SiPix Pocket Printer A6"** and click **"Next"**.
7. Select **"COM1: Communication Port"** (or Com 2, the one to which the printer is connected) and click **"Next"**.
8. Type in the printer name SiPix Pocket Printer A6, and click **"Finish"**. You will see an installation bar, when it finishes processing, the SiPix Pocket Printer A6 printer driver will be installed on your computer.
9. The system will start installing the driver at this point Windows 98 users may be prompted to put in your Windows 98 CD. Your computer will prompt you what steps to take, click **"Next"**

Windows 2000/XP

1. Insert the SiPix Pocket Printer A6 CD into the CD-ROM drive. The CD should auto run, otherwise, go to **Start --> Run**; enter **D:\ SiPixMenu.exe** (where D:\ is your CD-ROM drive).
2. From the Installer Menu click on **"Install Windows 2000/XP Printer Driver"**.
3. The Welcome will appear, click **"Next"** to continue setup.
4. On the Add Printer Wizard screen, select **"Local Printer Attached to this Computer"** and uncheck **"Automatically detect and install my Plug and Play printer"** and click **"Next"**.
5. Select **"Use the following port"** and select **"COM1: (Serial Port)"** from the drop down list and click **"Next"**.
6. On the Add Printer Software, Install Printer Software screen, click the **"Have Disk"** button that is located on the lower right of the screen.
7. In the Install From Disk screen, type in **D:\Win2000** (where D:\ is your CD-ROM drive) and click **"OK"** (See figure A).
8. Highlight **"SiPix Pocket Printer A6"** and click **"Next"**.
9. On the Name Your Printer screen, type in SiPix Pocket Printer A6, select whether or not you want this to be your default printer, and then click **"Next"**.
10. On the Printer Sharing Screen, select **"Do not share this printer"** and click **"Next"**.
11. On the Print Test Page Screen, select **"No"** and click **"Next"**.
12. Click **"Finish"** to complete Printer Driver setup.
13. A Microsoft Hardware Installation warning message may appear, youcan ignore this message by clicking **"Continue Anyway"** (Ignoring this message will not effect your computer or printer driver).
14. An installation bar will appear, when it completes processing, your Pocket Printer A6 Printer Driver will be installed on your computer.

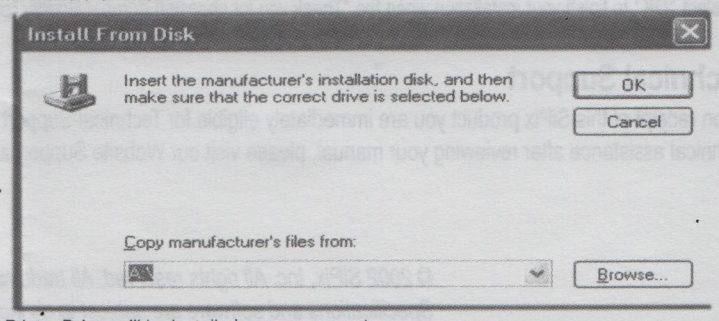

Step 4: Configuring the RS-232 Serial Port (Windows Only)

Note: If you are using COM 2 please substitute below for COM 1.

1. Highlight the **"My Computer"** icon on your desktop and use the right mouse button to right click on the icon, then pull down to **"Properties"** and left click **"Properties'** on this menu to access the **"System Properties"** menu.
2. Choose the **"Device Manger"** tab on the **"System Properties"** screen. *(See Figure B)*
3. Highlight "Communications Port (COM 1) and press the "Properties" button, this will bring up the "COM 1 Properties" screen. *(See Figure C)*
4. Change the port settings: See *Figure C* and *Appendix 1*:

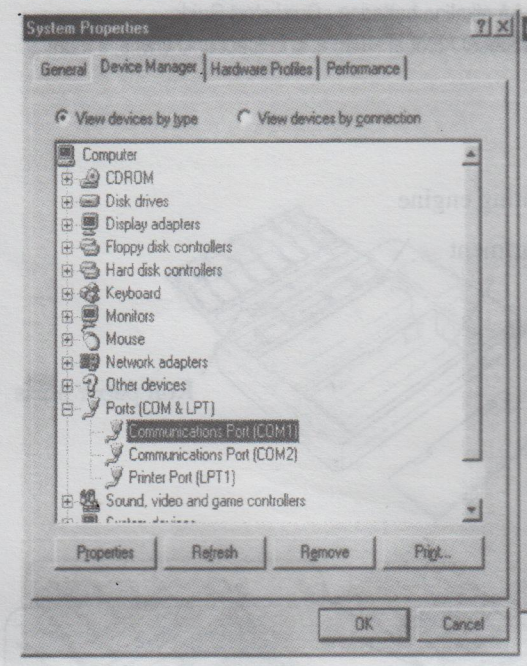

Figure B

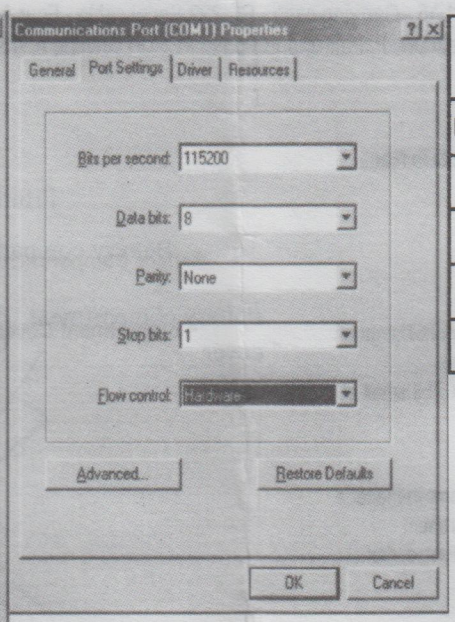

Figure c

Setting Name	Original Setting	Setting Needed
Bits Per Second:	9600	115200
Data Bits:	8	8
Parity:	None	None
Stop Bits:	1	1 or 2
Flow Control:	Xon/Xoff	Hardware

Appendix 1

For More Information on the Installation and Use of the Pocket Printer A6 on your PDA, Please Refer to the Owner's Manual:

How to install on Pocket PC® PDA:	See the Electronic Manual	Page: 11
How to use on Pocket PC® PDA:	See the Electronic Manual	Page: 12-13
How to install on Palm® PDA:	See the Electronic Manual	Page: 14
How to use on Palm® PDA:	See the Electronic Manual	Page: 14-16
Troubleshooting issues with your A6:	See the Electronic Manual	Page: 17-19

How to Access Pocket Printer A6 Owner's Manual (You will need Acrobat Reader installed on your computer to view the manual)

1. Insert Pocket Printer A6 CD into your CD-ROM drive and go to My Computer.
2. Right-click on D:\ (Where D:\ is your CD-ROM drive) and select "Explore".
3. Double-click the Manual folder, and then double-click on Pocket Printer A6 Manual to open it in Adobe Reader.

Note: The manual does not automatically install to your computer. You will need to copy the manual file to your computer or keep the Pocket Print A6 CD handy.

How to Install Adobe Acrobat Reader from this CD

1. Click **Start** --> **Run** and enter **d:\AR505enu.exe** (where "d" is your CD-ROM drive). Select **"OK".**
2. The *Adobe Setup* screen will appear. Select **"Next"**.
3. Choose the installation destination location in which to install Acrobat Reader. The default destination is recommended. Select **"Next"** to choose the default destination and to continue.
4. Select **"OK"** to finish your installation when the "Thank you for choosing Acrobat Reader" screen comes up.

Technical Support

Upon receipt of this SiPix product you are immediately eligible for Technical Support during the warranty period of one year from the purchase date. If you require technical assistance after reviewing your manual, please visit our Website Support at www.sipixdigital.com/support

© 2002 SiPix, Inc. All rights reserved. All trademarks are the property of their respective holders.
Specifications and software are subject to change without notice.